Smart Micro-Grid

Dr. H.K. Verma
Distinguished Professor
Department of Electrical and Electronics Engg.
Sharda University, Greater Noida
website: profhkverma.info

Formerly:
Director Offg. (2011)
Deputy Director (2006 – 2011)
Professor of Electrical Engg. (1982 – 2012)
IIT Roorkee/ University of Roorkee

Expert Lecture delivered at:

Dr. B.R. Ambedkar National Institute of Technology

Jalandhar

9th October, 2017

CONTENTS

Part 1

What is Smart Grid?

Electricity Supply Chain

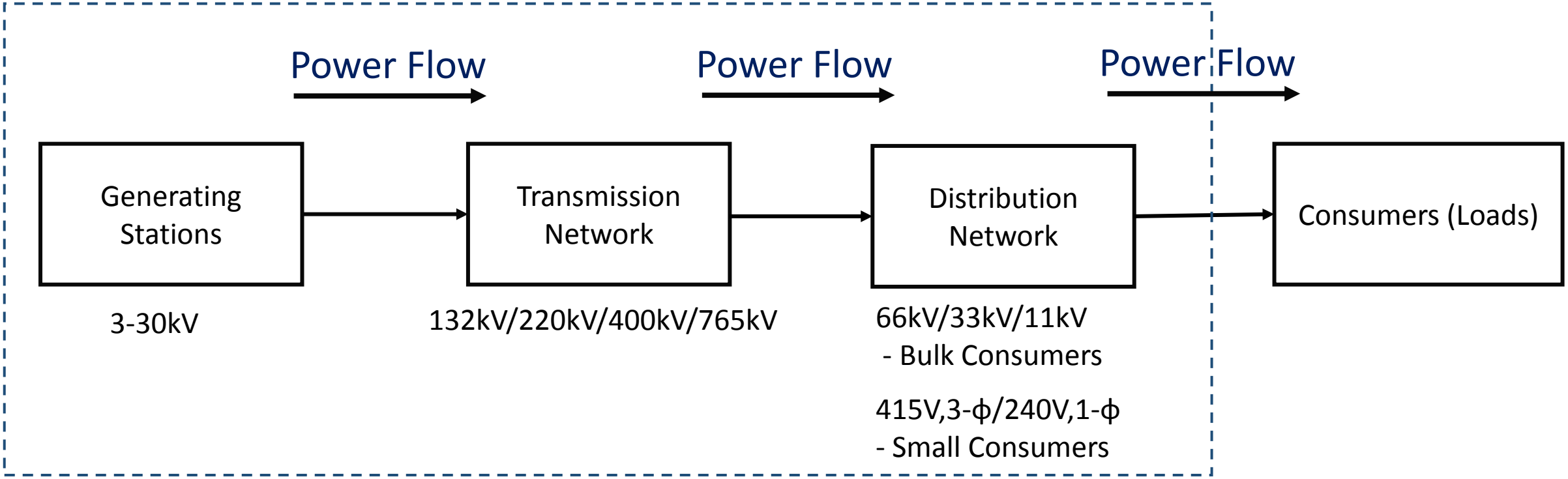

Electrical Power System

Traditional Power Grid

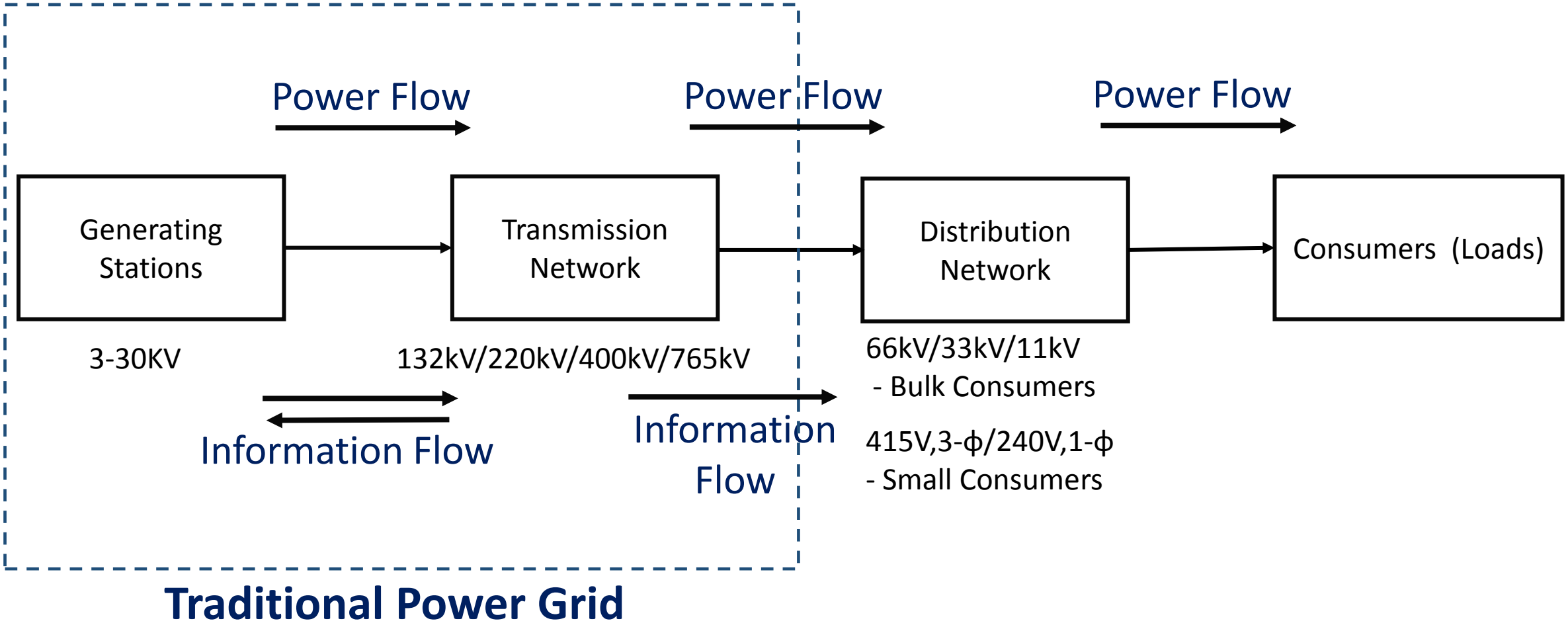

Smart Power Grid

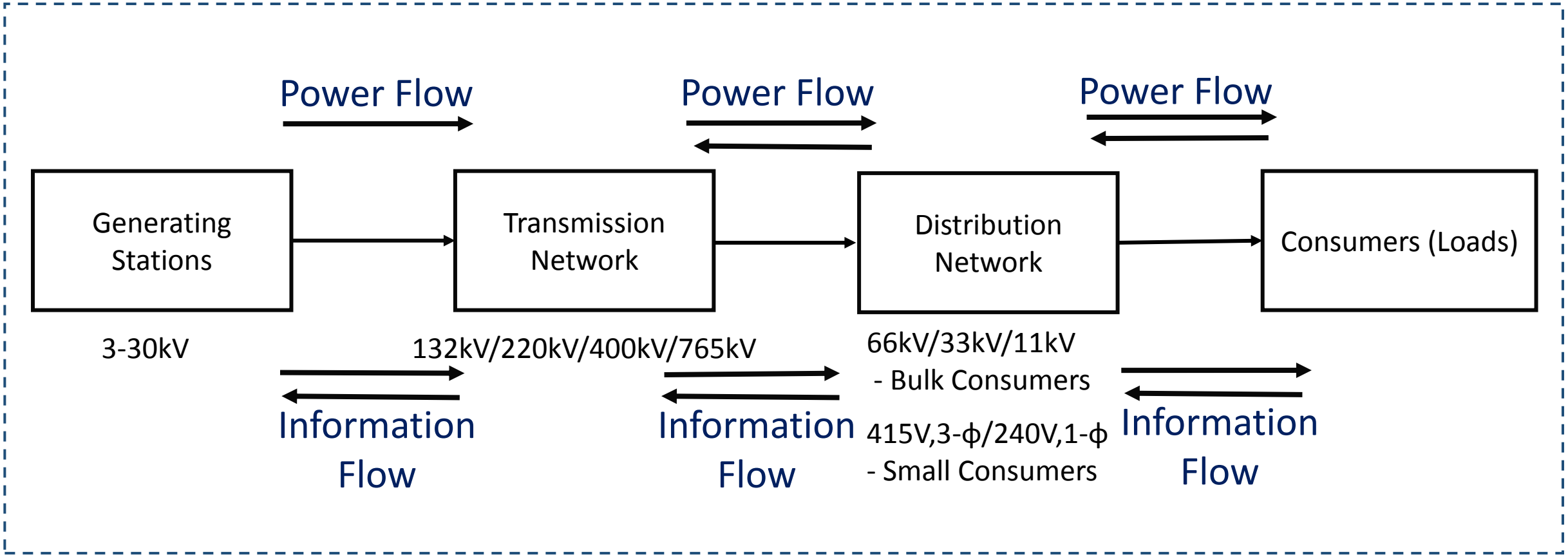

Smart Power Grid

Definition of Smart Grid

Smart Grid is a concept aimed at integrating the existing power system infrastructure and encouraging participation of consumers in the operation of the power grid, with the ultimate objective of efficient, reliable and high-quality electricity to consumers at competitive prices, while reducing overall impact of producing and using electricity on the environment, characterized by two-way flows of energy and information.

Objectives of Smart Grid

1. To increase the efficiency of whole electricity supply chain including consumer end or demand side.
2. To improve reliability of the service (power supply).
3. To improve the quality of power.
4. To encourage competition amongst electricity suppliers.
5. To help consumers to control their energy consumption pattern to minimize electricity bill.
6. To reduce impact of electricity generation and its use on environment.

Components of Smart Grid

1. Power system (Generation + Transmission + Distribution)
2. Smart distribution
3. Distribution automation (DA)
4. Demand-side management (DSM))
5. Two-way communication infrastructure
6. Distributed renewable energy generation (DREG or DG)
7. Advanced metering infrastructure (AMI)
8. Micro-grid
9. Smart transmission (ST)
10. Substation automation (SA)

Part 2

What is Micro-Grid?

Definition and Components of Micro-Grid

Definition given by Micro-grid Exchange Group of DOE:

Micro-grid is a group of interconnected loads and distributed energy resources (distributed generation + energy storage), within clearly defined electrical boundaries, that acts as a single controllable entity in terms of an energy grid.

Major components of a micro-grid:

1. Power distribution system (PDS)
2. Distributed generation (DG)
3. Energy storage (ES)
4. Flexible or controllable loads
5. Micro-grid control centre (MGCC)

Distributed Energy Resources (DERs)

Modes of Operation of Micro-Grid

Basically two modes of operation:

A. Grid-connected mode of operation

B. Isolated or Islanded mode of operation

Benefits of Micro-Grid

Major benefits of micro-grids:

1. Enables smart grid implementation.
2. Promotes distributed renewable energy generation.
3. Enhances energy security and efficiency.
4. Improves voltage regulation.
5. Supports main grid.
6. Enables supply-load optimization.
7. Enables electrification in rural and remote areas.

Micro-Grid Stimulants

Main factors stimulating the growth of micro-grids:

1. Cost of renewable energy generation is coming down fast.
2. Increasing concern for environmental protection.
3. Complexities of design and operation of micro-grid and interconnection with main grid have been largely addressed.

Part 3

Micro-Grid Architectures

Basic Structure of Micro-Grid

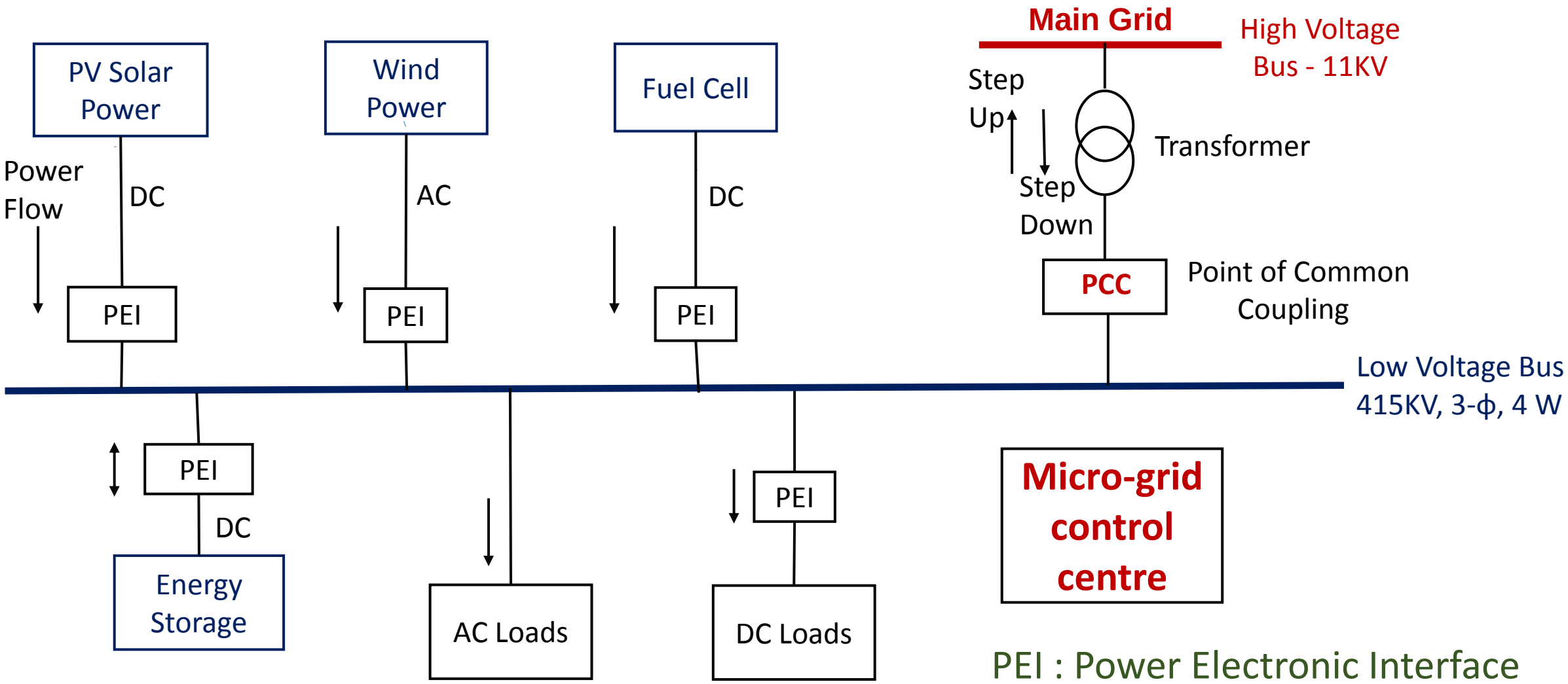

PEI : Power Electronic Interface

Micro-Grid Types

Types based on the power supply bus:

1. AC Micro-Grid
2. DC Micro-Grid
3. AC/DC Hybrid Micro-Grid

AC Micro-Grid Architecture

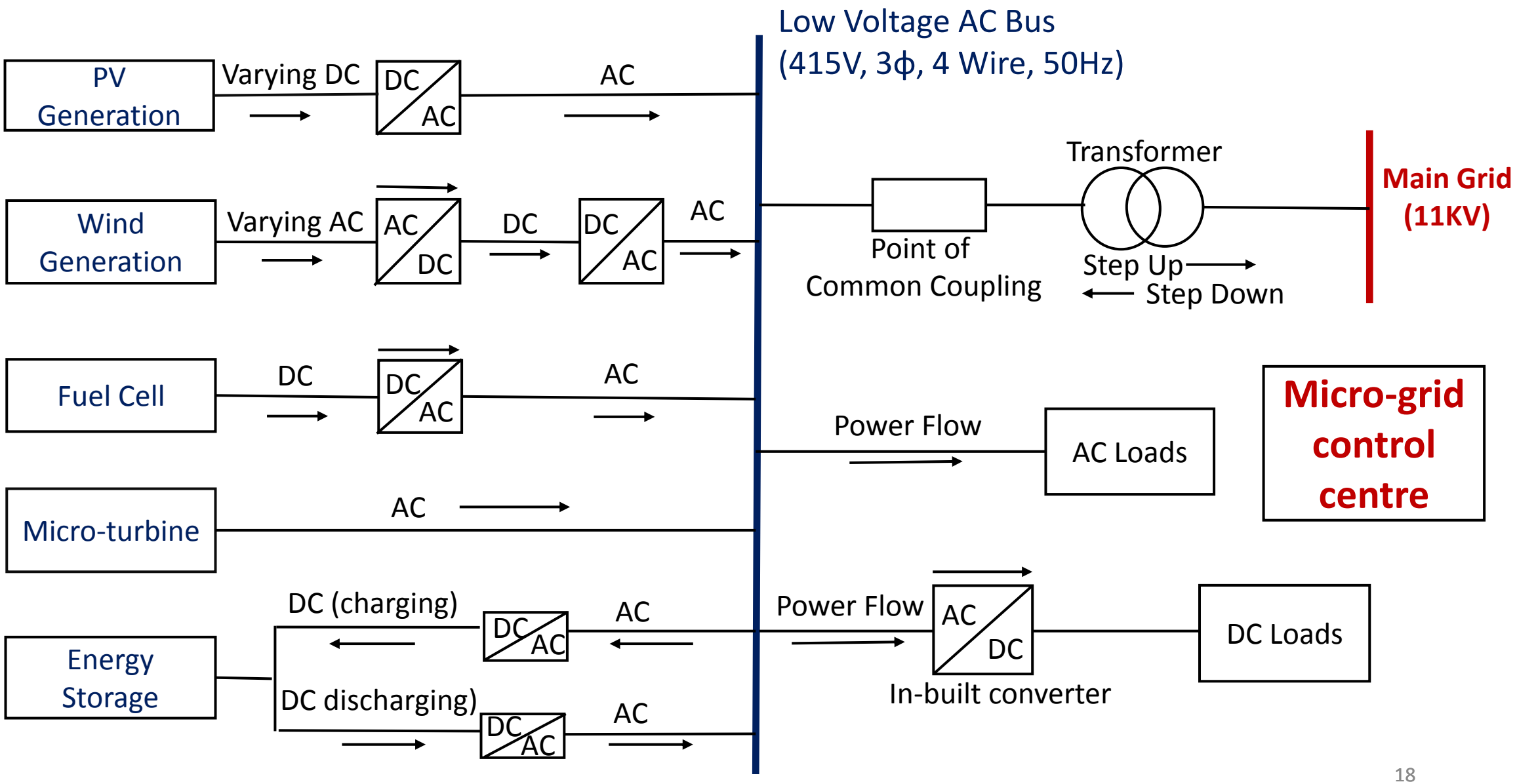

DC Micro-Grid Architecture

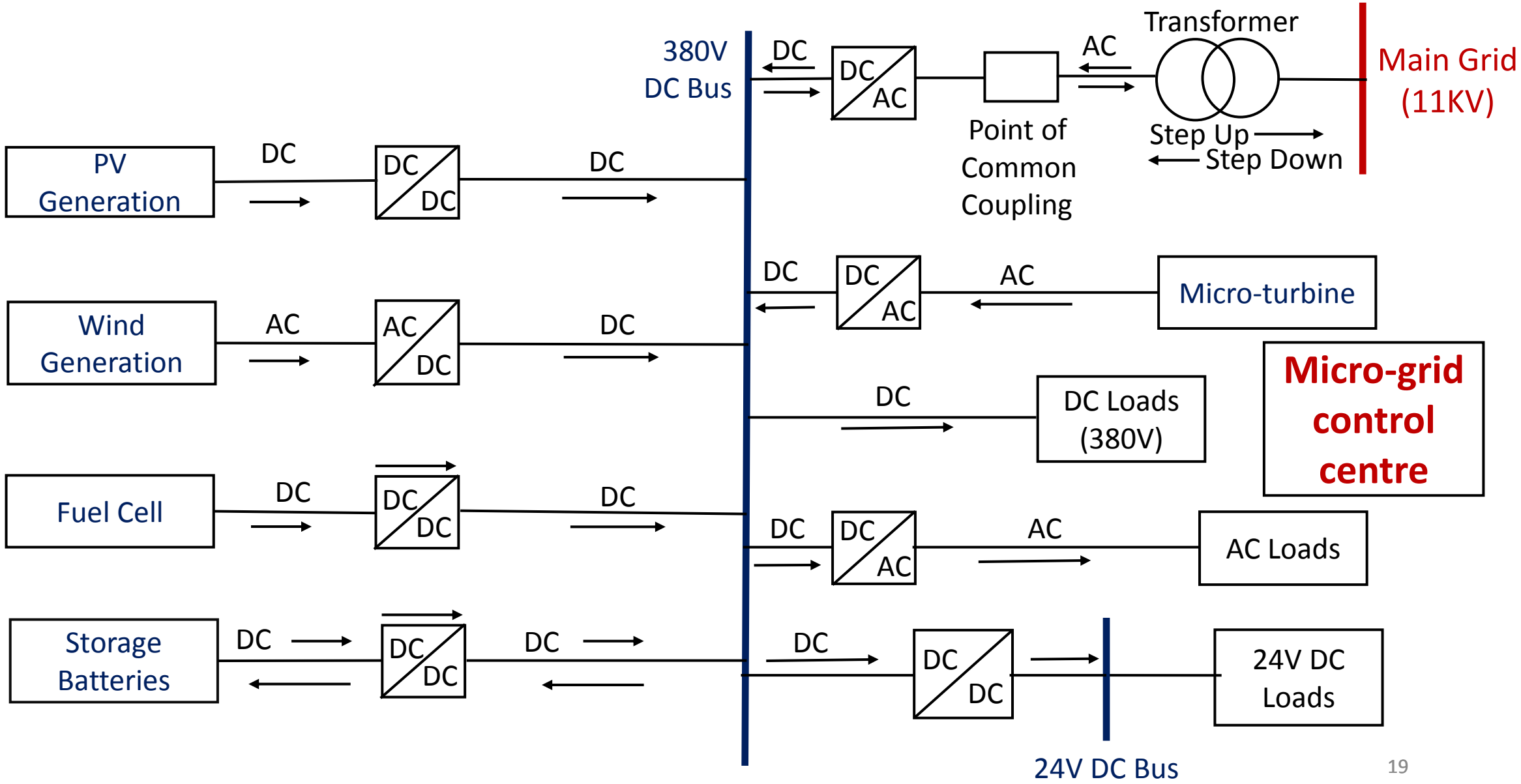

AC/DC Hybrid Micro-Grid Architecture

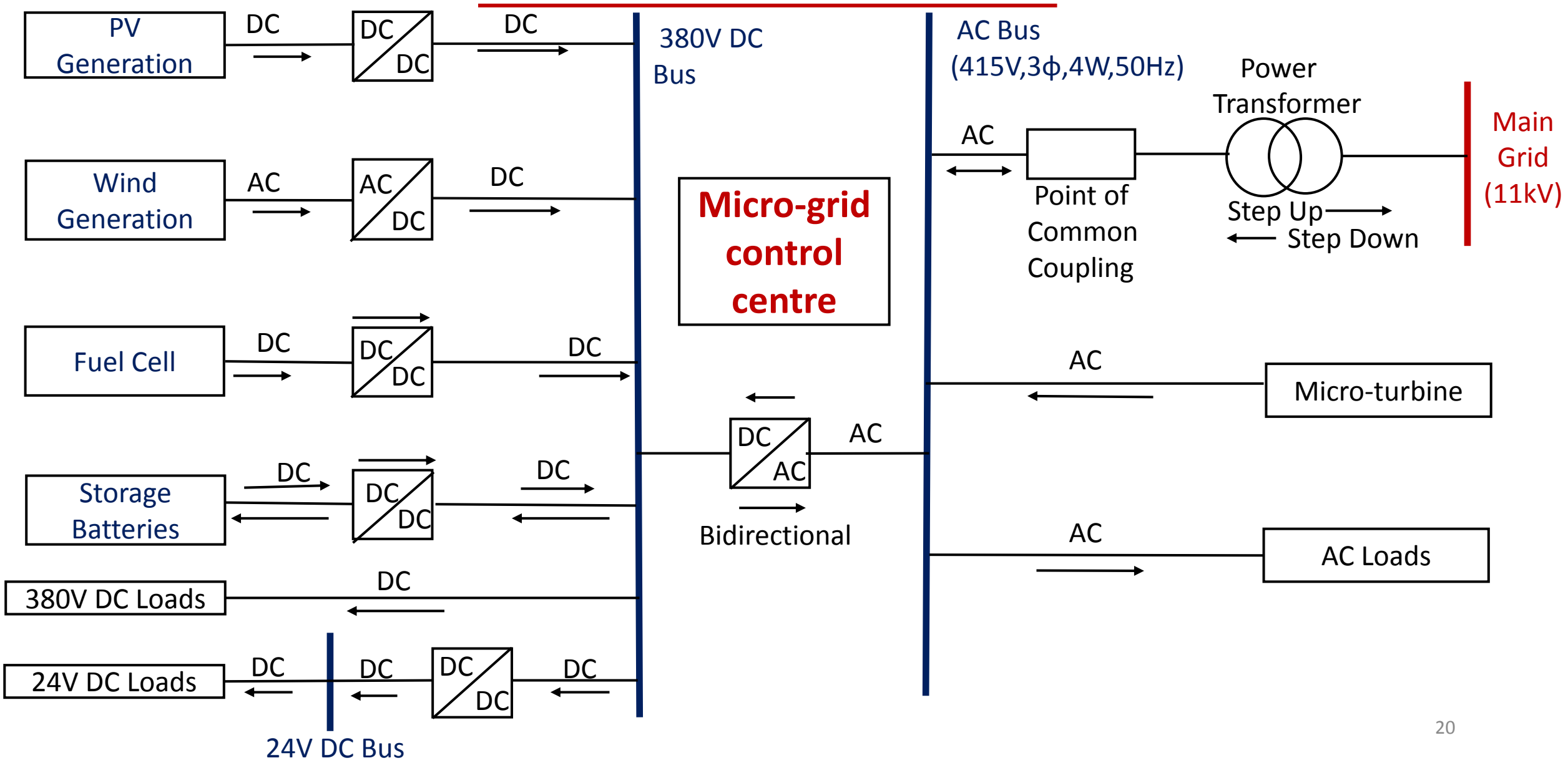

Part 4

Operation and Control of Micro-Grid

Challenges in Operation and Control of Micro-Grid

Operation & control of micro-grid is more challenging than that of main grid for following reasons:

1. Two modes of operation (against a single mode of operation of main grid)
2. Different control strategies need to be implement in two modes of operation:

   (a) Grid-connected mode

   - If there is a short-fall of generation, then import power from main grid
   - If generation is surplus, then export power to main grid
   - Control of power export is quite difficult

   (b) Islanded mode

   - If generation is surplus, then store surplus power
   - If no storage or insufficient storage, then reduce generation
   - If there is a short-fall of generation, then take power from storage
   - If stored energy is not sufficient, then reduce the load.

Contd….

Challenges in Operation and Control of Micro-Grid

Contd...

3. Distributed generation is obtained from renewable sources:
   - Generation is intermittent, not continuous
   - Generation keeps on varying
   - Generation is partially controllable

4. Spinning reserves are much limited:
   - Real spinning reserve: Storage batteries
   - Virtual spinning reserve: Flexible loads

Three-Level Control

Complete control and automation of a micro-grid can be split into three hierarchical levels:

1. Primary or Local Control
2. Secondary or Centralized or Global Control
3. Tertiary or Optimization Control.

Addition of central control, using computers and communications, would make a micro-grid smart .

Primary or Local Control

1. Strategy: Local controls by individual controllers (converters)
2. Controls are based on local measurements
3. Communications not required
4. Objectives: Power-flow control, voltage control , frequency synchronization
5. PV Generation: Controls performed by inverter:
   - Frequency control
   - Voltage control
   - Maximum power point tracking (MPPT)
6. Wind Generation: Controls performed by converters:
   - Voltage control (AC-DC converter)
   - Frequency synchronization (DC-AC converter)
7. Storage Battery: Controls performed by bidirectional converter:
   - Charging current control
   - Discharging current control

Secondary or Central Control

1. Strategy: Microgrid is treated as a single system
2. Control is based on the system-wide measurements
3. Communication Requirements
   - Two way communication is essential
   - It should be fast
   - It should be reliable
4. Objectives:
   - Active-power sharing among different distributed generators
   - Reactive-power sharing among different distributed generators
   - Supply voltage regulation
   - Power quality control
5. Control Technique : SCADA

Tertiary Control or Optimization

Two optimization strategies have been suggested:

1. Economic optimization alone
   - Strategy: minimization of the cost of energy
   - Consider dynamic pricing of electricity and accordingly carry out demand response.
2. Multi-objective optimization
   - Strategy: minimization of a multi-objective cost function
   - The cost -function may include:
     - Micro-grid construction cost
     - Operational costs of distributed generators
     - Start-up and shut-down costs of distributed generators
     - Costs of interrupted loads
   - May also include minimization of gas emissions.

Part 5

Application Areas of Micro-Grid

Application Areas of Micro-Grid

1. Private organizations
   - Industrial and commercial organizations
   - Privately owned
   - Microgrid is operated by facility managers
   - Limited interaction with utility
   - Focus on economic and reliable power
2, Government organizations
   - Microgrid operates closely in parallel with main grid

   (a) City or municipal micro-grid
   - Usually works as a driver of SMART CITY vision
   - Focus on economic and reliable power

   (b) Military-base micro-grid
   - Focus on reliability and safety

Contd…..

Application Areas of Micro-Grid

Contd…..

3. Electric utilities
   - Vertically integrated with utility's distribution system and customer-base
   - Focus on service quality and power quality
4. Educational institutes
   - Called campus micro-grid
   - Focus on
     - "Economic and reliable power" and/or
     - "Innovation and research in smart grid technologies / microgrid"
5. Remote village or village-cluster
   - Where main-grid connectivity is not viable
   - Ownership may be with village community / village Panchayat / utility
   - Focus on electrification of remote / rural areas

Part 6

Case Study:
A Campus Micro-Grid

Upgradation of Campus PDS to Campus Micro-Grid

1. Add inter-substation links
2. Add renewable distributed generation (DG): (Distributed roof-top PV solar power plant)
3. Integrate the distributed PV solar power plant with PDS at major load points

Campus Power Distribution System

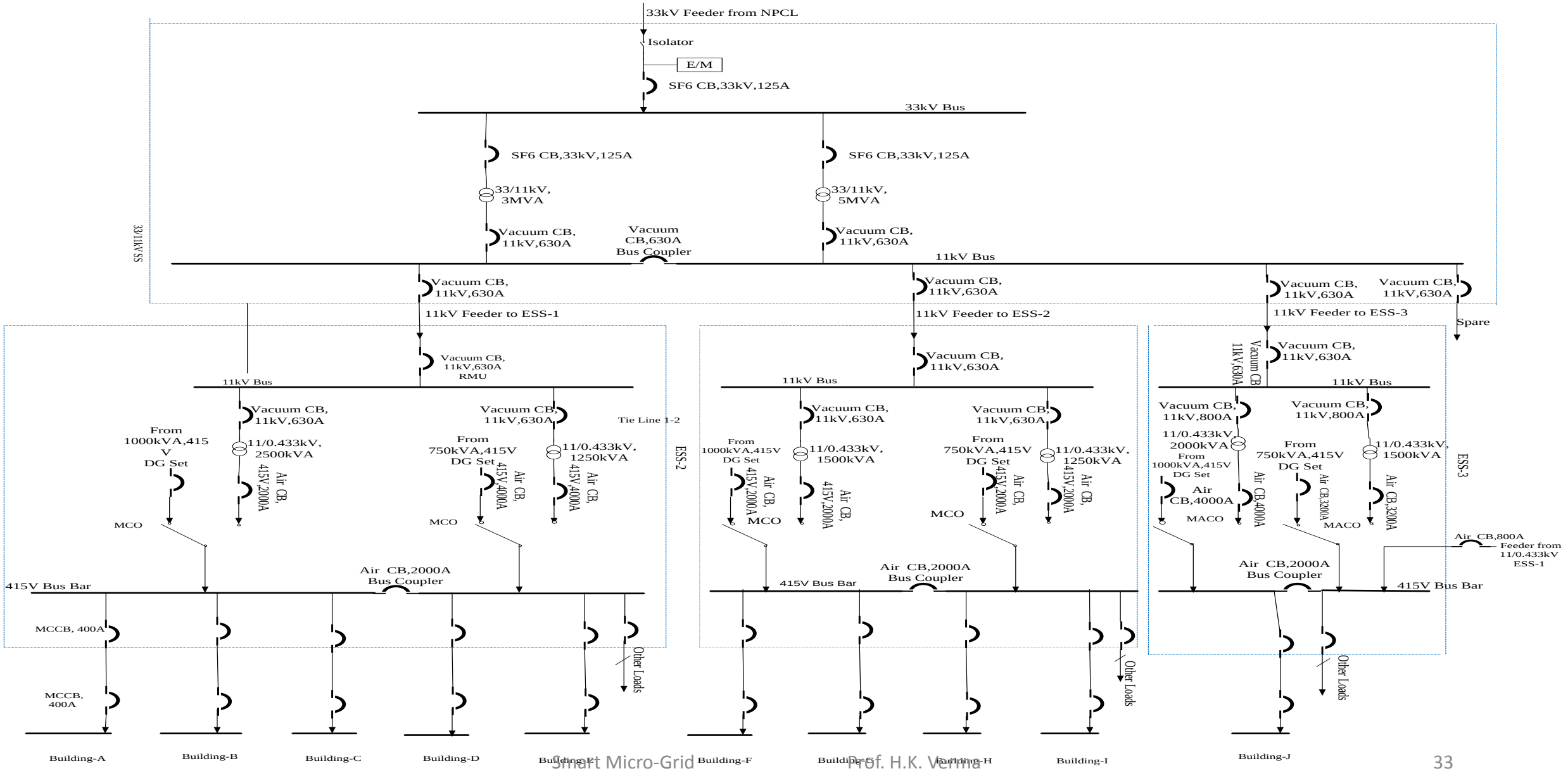

Micro-Grid : PDS with Distributed Generation and Tie-Lines

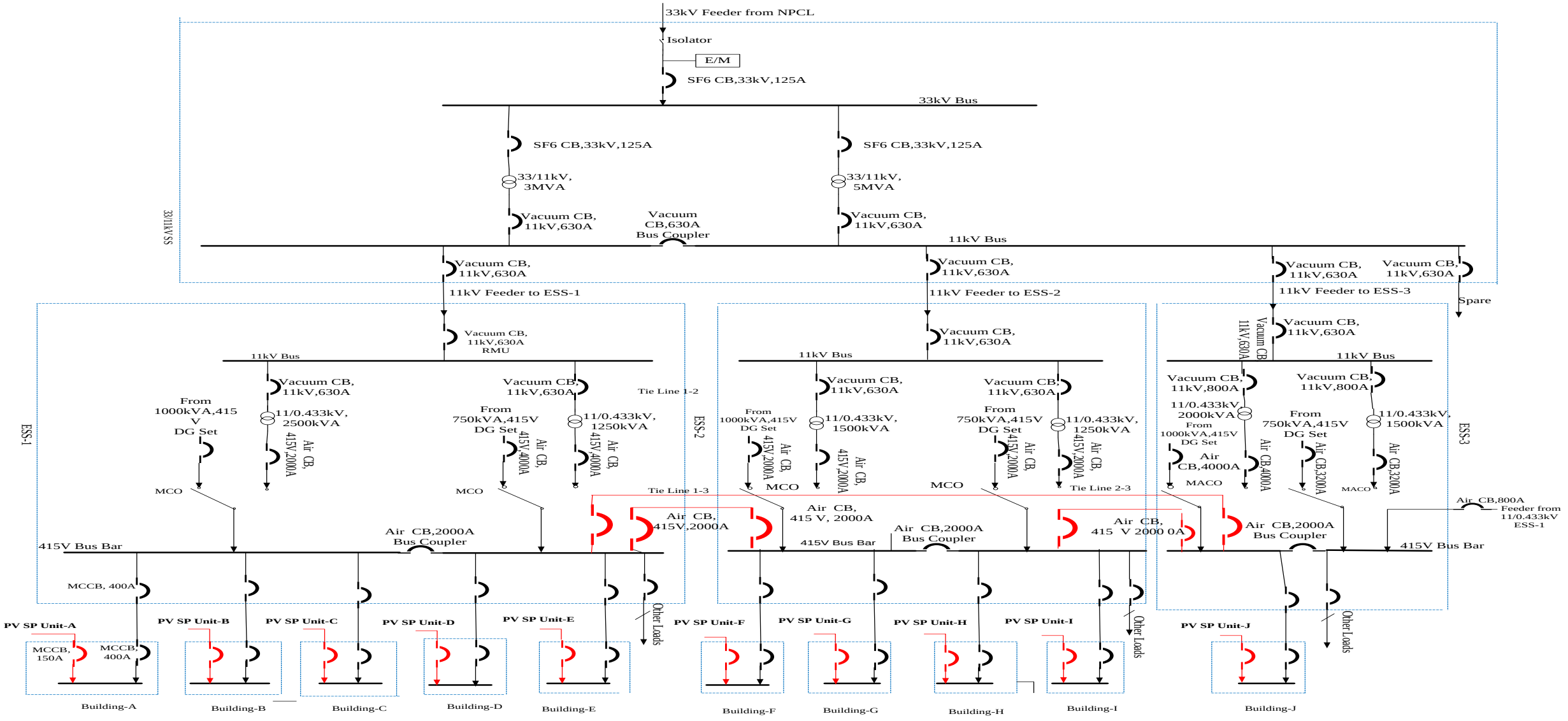

LEGEND-
MCO: Manual Change Over Switch, 1000A
MACO: Both Manual & Auto Change Over Switch, 1000A

Typical Layout of SCADA System for Smart Micro-Grid

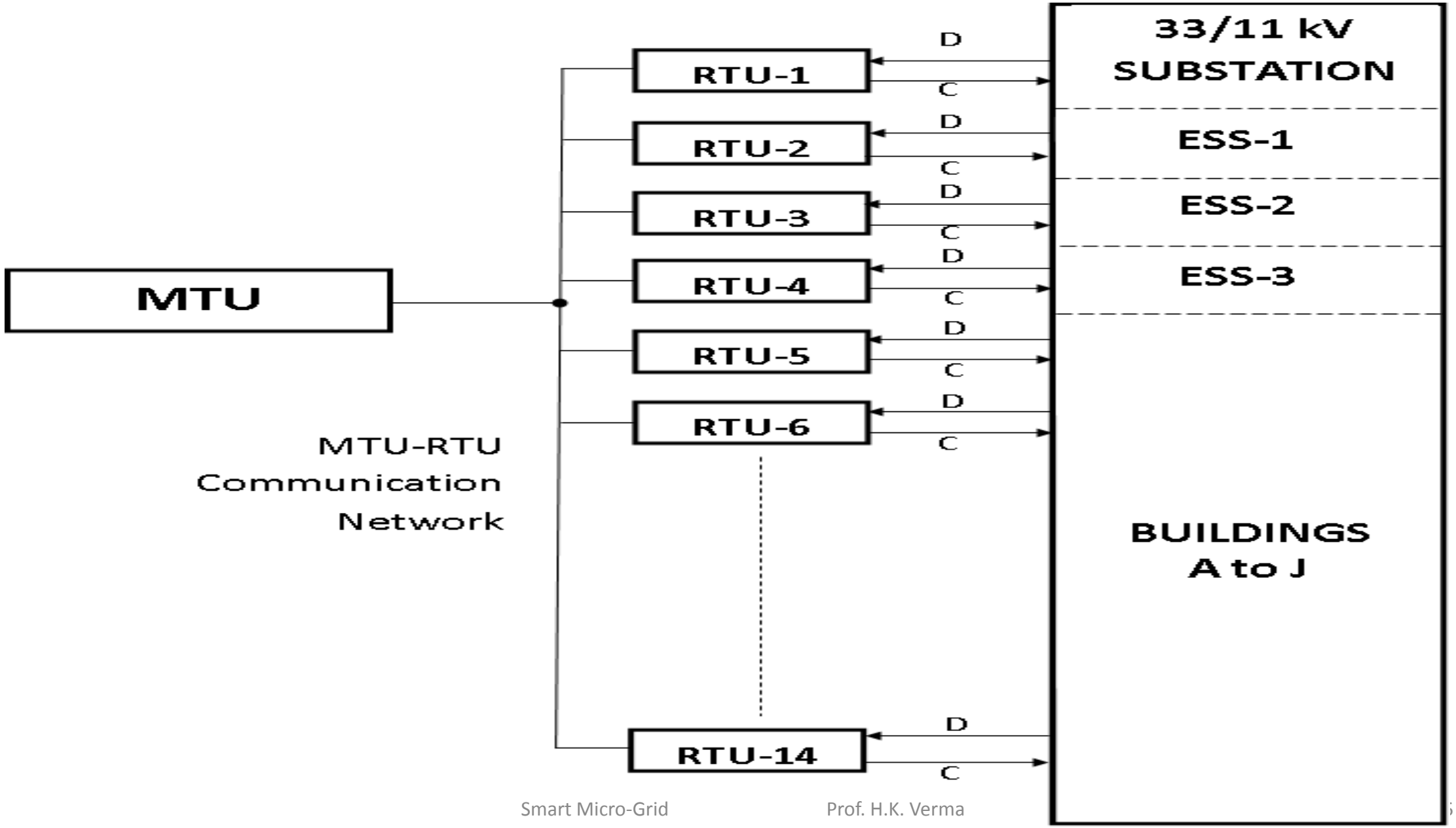

Data Network for MTU-RTU Communication

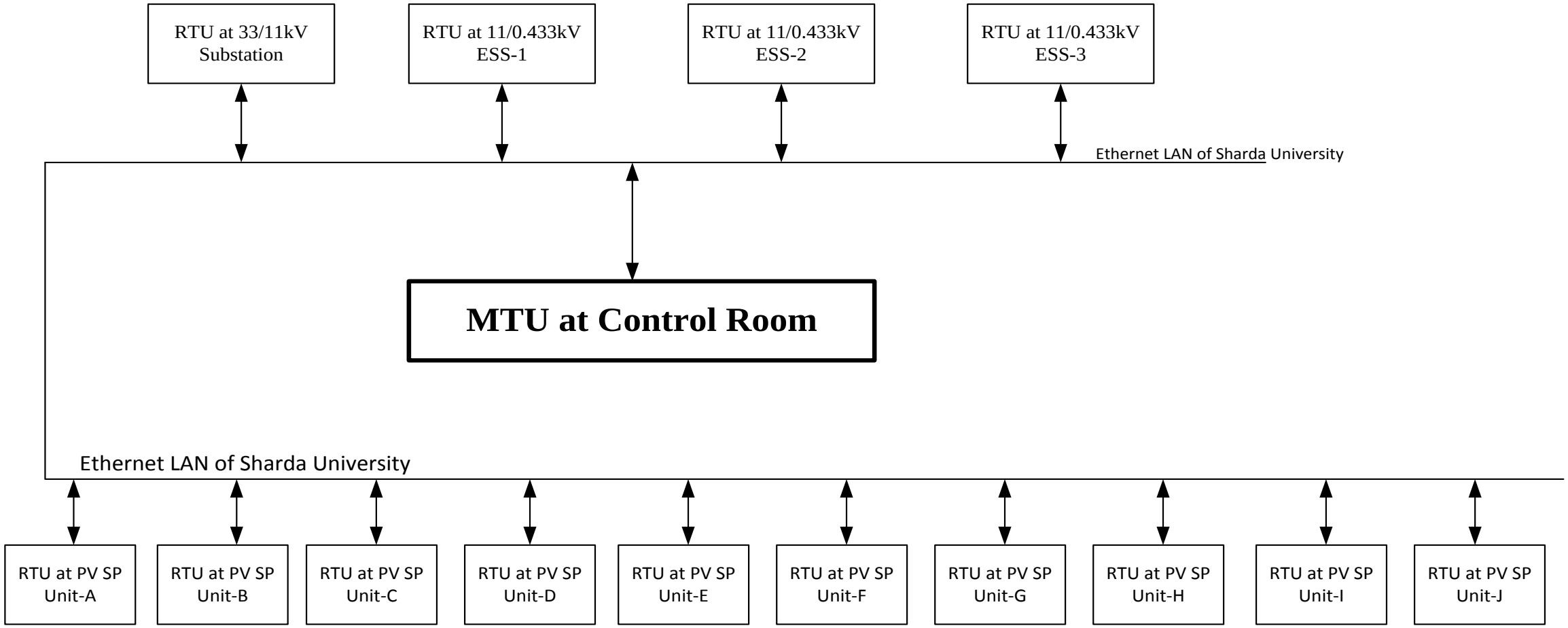

Legend

ESS: Electric Substation
PV SP : Photo Voltaic Solar Power
RTU: Remote Terminal Unit
MTU: Master Terminal Unit

Master Terminal Unit (Control Room)

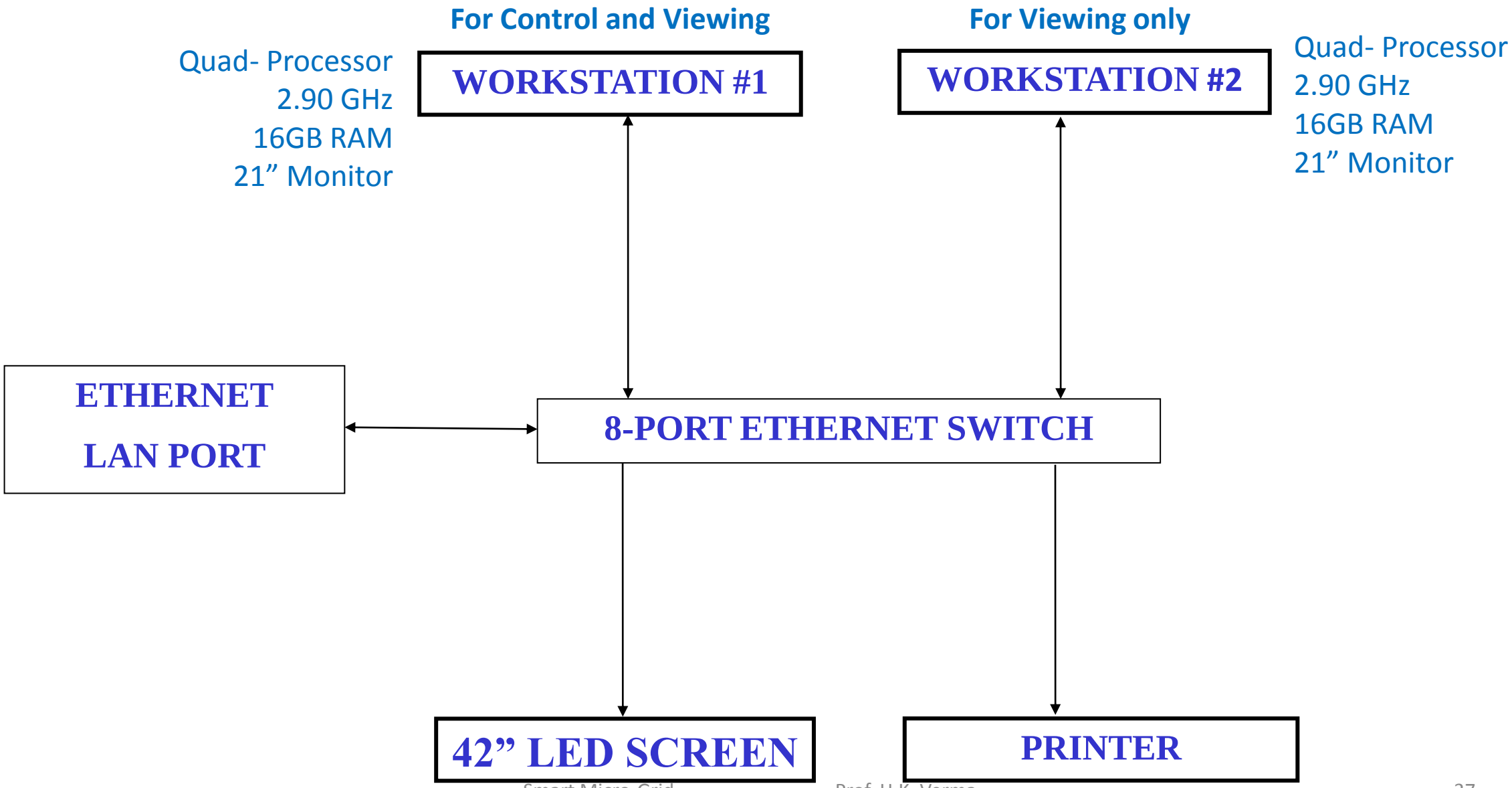

Remote Terminal Unit

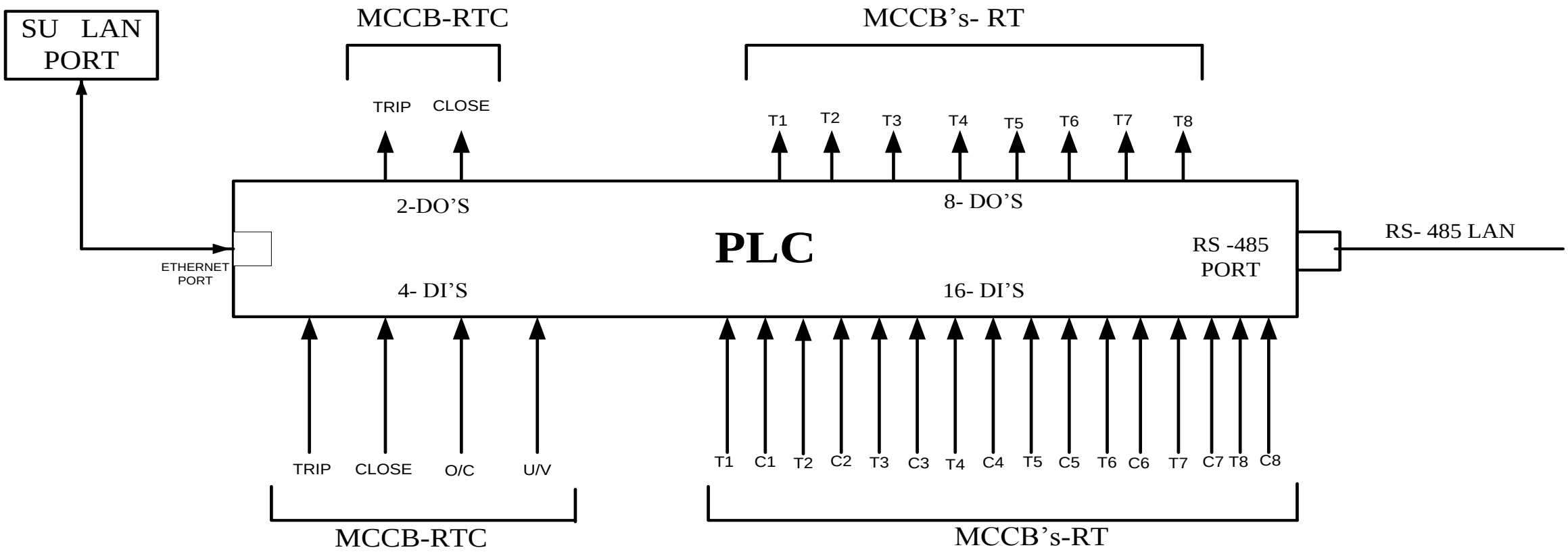

Legend
MCCB-RTC: MCCB with Remote Trip & Close.
MCCB-RT: MCCB with Remote Trip only.

Advanced Metering Infra-Structure (AMI)

- Smart multi-function digital meters on :
  - 33-kV feeder
  - 11-kV feeders
  - Inter SS tie lines
  - 415-V mains feeders
  - Important / large load feeders

- RTUs read SMF meters on their respective RS485-LAN s
- CTs and cabling used with every SMF meter
- In addition, VTs are also used with SMF meters on 33kV/11kV feeders
- RTUs transmit SMF meter readings to MTU on Ethernet-LAN

RS485 PAN for Advanced Metering

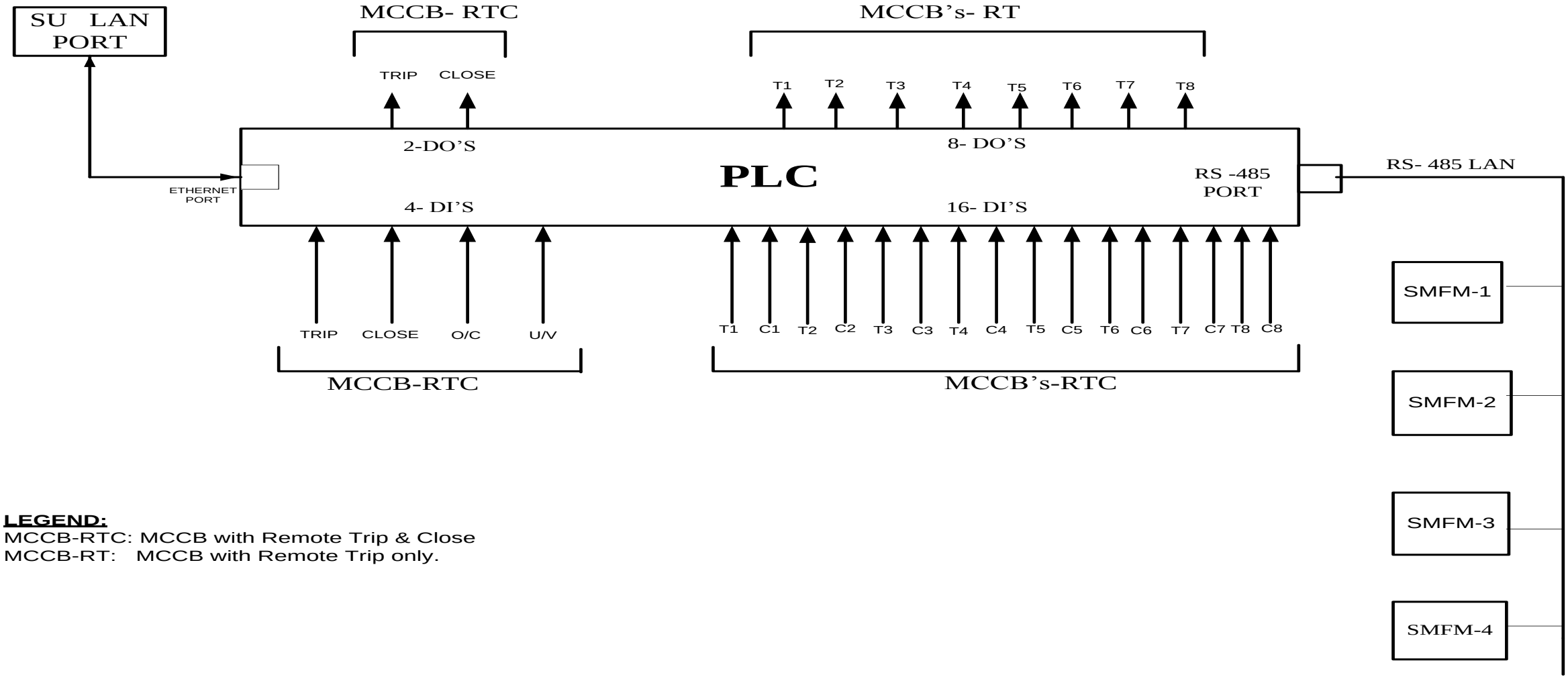

LEGEND:
MCCB-RTC: MCCB with Remote Trip & Close
MCCB-RT: MCCB with Remote Trip only.

Thanks